TECHNICAL DATASHEET

FAST RIGID COUPLING | TYPE FITPRO®

FIRE HVAC

Size range: 1¼" - 4"

FM APPROVED

CNBOP-PIB

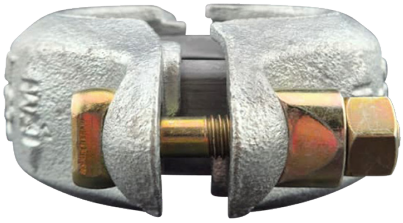

C

Fitpro® is a coupling designed to make fast rigid connections in both dry and wet sprinkler piping systems. It is used with grooved piping only and it is ready for installation. **Patented design**.

Working pressure

- 2,07 MPa / 20,7 bar / 300 psi[1].

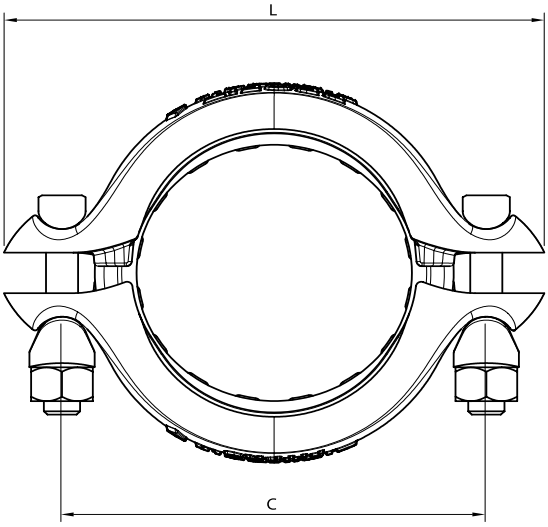

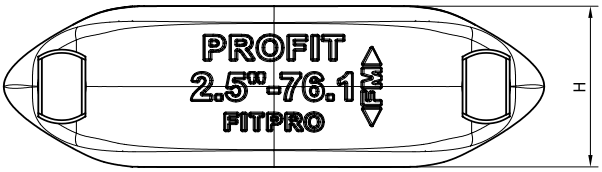

C

Reference				Nominal size		Pipe Ø O.D.	Coupling dimensions			Bolt size	Socket size	Torque	Weight
Red	Galva	Black	Corrofit Galva+red	NPS inch	DN mm	mm	L mm	H mm	C mm	metric	mm	Nm	kg
FitproR1¼	FitproG1¼	FitproB1¼	FitproGR1¼	1¼"	32	42,4	114	46	82	M10	17	40-50	0,64
FitproR1½	FitproG1½	FitproB1½	FitproGR1½	1½"	40	48,3	120	46	88	M10	17	40-50	0,72
FitproR2	FitproG2	FitproB2	FitproGR2	2"	50	60,3	133	47	101	M10	17	40-50	0,80
FitproR2½	FitproG2½	FitproB2½	FitproGR2½	2½"	65	76,1	149	47	117	M10	17	40-50	0,95
FitproR3	FitproG3	FitproB3	FitproGR3	3"	80	88,9	162	47	130	M10	17	40-50	1,07
FitproR4	FitproG4	FitproB4	FitproGR4	4"	100	114,3	201	51	161	M12	22	100-110	1,74

[1] For use with Sched 40/30 pipes. Please refer to table page 3 for use with other pipes.

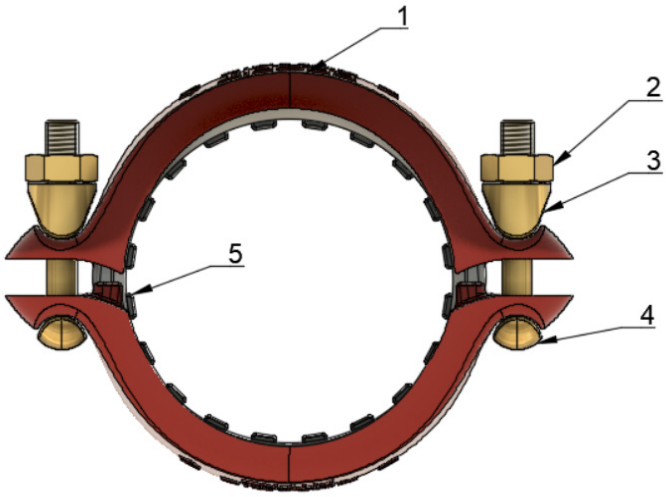

Material specifications

1. Fitpro® coupling housing (2x): ductile iron conforming to EN-GJS-450-10 (ASTM A536 Grade 65-45-12).
   Standard coatings are:
   - Red (RAL 3000) painted EPD epoxy paint (type FitproR).
   - Hot dip galvanised (type FitproG).
   - Coated with black powdercoating paint (RAL 9005) (type FitproB).
   - Corrofit, polyester-based coating, Red RAL 3000, (any other colour on request) (type FitproGR).
2. Heavy hex nut (2x): carbon steel heavy hexagon nut Grade 9, conforming to ISO 898-1.
   Standard coating is: yellow zinc electroplated conforming to ISO 4042.
3. R-spacer (2x):
   Semi-spherical spacer: ductile iron conforming to EN-GJS-450-10 (ASTM A 536 65 45 12) or carbon steel with comparable physical properties.
   Standard coating is: yellow zinc electroplated conforming to ISO 4042.
4. T-bolt (2x): carbon steel heavy hexagon nut grade 9.8, conforming to ISO 898-2Standard coating is: yellow zinc electroplated conforming to ISO 4042.
5. Fitpro® self-lubricating gasket (1x):
   Grade: EPDM-rubber[2], properties in accordance with ASTM D 2000.

Corrofit-line

1. Castings coated with two-layer protection system: hot dip galvanised + polyester-based powdercoating paint (RAL 3000).

2, 3, 4. Geomet® 321 B-coating.

[2] Suitable for use with water and compressed air, maximum working temperature + 50 °C. For use with fluids or other working temperatures, please contact our technical R&D department.

FUNCTIONAL DATA

Red	Galva	Black	Corrofit Galva+red	Maximum pipe end separation[3] (mm)	Maximum end load[4] (N)
FitproR5/4	FitproG5/4	FitproB5/4	FitproGR5/4	3,8	3049
FitproR6/4	FitproG6/4	FitproB6/4	FitproGR6/4	3,8	3930
FitproR2	FitproG2	FitproB2	FitproGR2	3,3	6173
FitproR21/2	FitproG21/2	FitproB21/2	FitproGR21/2	3,3	9856
FitproR3	FitproG3	FitproB3	FitproGR3	3,3	13128
FitproR4	FitproG4	FitproB4	FitproGR4	3,8	21540

[3] This value represents the maximum axial pipe movement (when pressurising the system). To be taken into account during system layout. In practice values may vary (decrease). Depending on: actual groove dimensions, vertical or horizontal installation, and spacing applied during installation.
[4] Table values are maximum total end load from external + internal forces acting on the coupling joint when using standard weight pipes.

- The maximum pipe end separation values shown in the table are valid for rolled groove, they may be doubled for cut groove. For design and installation purposes, we recommend to reduce these values by 50% (1”-3”) and by 25% (4”-10”).

LISTINGS & APPROVALS

Pipe Brand / type	Pipe range (DN)	FM Pressure rating
Rolled and Cut Groove Schedule 40	1-¼, 1-½, 2, 3 inch 76.1 mm	300 psi / 2070 kPA
Rolled and Cut Groove Schedule 40	4 inch	232 psi / 1600 kPA
Rolled Groove Schedule 10	1-¼, 1-½, 2, 3 inch 76.1 mm	300 psi / 2070 kPA
Rolled Groove Schedule 10	4 inch	232 psi / 1600 kPA
Rolled Groove ASME B36.10-2004 Schedule 10 Equivalent EN 10217-7	1-¼, 1-½, 2, 3 inch 76.1 mm	300 psi / 2070 kPA
Rolled Groove ASME B36.10-2004 Schedule 10 Equivalent EN 10217-7	4 inch	232 psi / 1600 kPA
Rolled Groove Schedule 5	1-¼, 1-½, 2 inch	175 psi / 1205 kPA
Rolled Groove ISO 4200 Thickness D	4 inch	232 psi / 1600 kPA
Rolled Groove ISO 4200 Thickness E	1-¼, 1-½, 2, 3 inch 76.1 mm	300 psi / 2070 kPA
Rolled Groove ISO 4200 Thickness E	4 inch	232 psi / 1600 kPA
Rolled and Cut Groove ISO 4200 Thickness F	1-¼, 2, 3 inch	300 psi / 2070 kPA
Rolled and Cut Groove ISO 4200 Thickness F	4 inch	232 psi / 1600 kPA
Rolled Groove ISO 4200 Thickness F	1-½ inch 76.1 mm	300 psi / 2070 kPA
Rolled and Cut Groove ISO 4200 Thickness G	1-¼, 1-½, 2, 3 inch 76.1 mm	300 psi / 2070 kPA
Rolled and Cut Groove ISO 4200 Thickness G	4 inch	232 psi / 1600 kPA

Pipe Brand / type	Pipe range (DN)	FM Pressure rating
Rolled Groove DIN 2448	1-¼, 1-½, 2, 3 inch 76.1 mm	300 psi / 2070 kPA
Rolled Groove DIN 2448	4 inch	232 psi / 1600 kPA
Rolled Groove DIN 2458 / EN 10220	1-¼, 1-½, 2, 3 inch 76.1 mm	300 psi / 2070 kPA
Rolled Groove DIN 2458 / EN 10220	4 inch	232 psi / 1600 kPA
Sprinkler Nordic AB Nordic Flow	1-¼, 1-½, 2, 3, 4 inch 76.1 mm	232 psi / 1600 kPA
Wuppermann Austria GmbH WLight7	1-¼, 1-½, 2, 3, 4 inch 76.1 mm	175 psi / 1205 kPA
Wuppermann Austria GmbH WGALWELD7	1-¼, 1-½, 2, 3, 4 inch 76.1 mm	175 psi / 1205 kPA
Wuppermann Austria GmbH WGALWELD7E	1-¼, 1-½, 2, 3, 4 inch 76.1 mm	175 psi / 1205 kPA
Wuppermann Austria GmbH WFlow5	1-¼, 1-½, 2 inch	175 psi / 1205 kPA
Wuppermann Austria GmbH WGALWELD5	1-¼, 1-½, 2 inch	175 psi / 1205 kPA
Wuppermann Austria GmbH WGALWELD5E	1-¼, 1-½, 2 inch	175 psi / 1205 kPA
Borusan Mannesmann Easy Flow	1-¼, 1-½, 2, 3, 4 inch 76.1 mm	175 psi / 1205 kPA

Approvals

- Sprinkler-specific:

FM APPROVED
FM standard
1920

CNBOP-PIB

CE
EN10311
(CPR305/2011)

- Other qualifications:

CSTB
ATT 21/034

Becetel

KOMO

- **CSTB:**
  Confirmes that PROFIT grooved couplings are independently assessed and validated for use in HVAC and fire protection systems, ensuring compliance with recognized standards, proper installation practices, and controlled manufacturing quality.
- **Becetel:**
  Independent testing covering vacuum resistance -0,85 bar (g) and high-pressure performance with water/glycol mixtures.
- **KOMO® (KIWA):**
  A quality mark that guarantees the quality, integrity and compliance with building regulations of products, processes, and services within the construction and infrastructure sectors for cold & hot non-drinking water applications up to 110°C.
  The certification is based on BRL 2013 and EN 681-1 standards.
- **Performance standards:**
  The Profit grooved couplings comply with the applicable product performance requirements stated in ASTM F1476.

ROLLED GROOVE DIMENSIONS ACC. TO AWWA C606

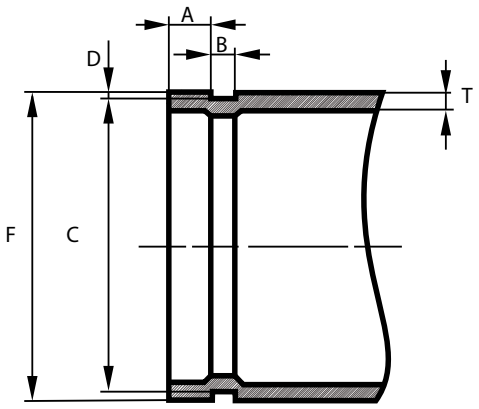

Nominal pipe size		Outside diameter			Gasket seat A	Groove width B	Groove diameter C		Groove depth* D	Maximum outspread F
NPS	(DN)	Size mm	+ mm	- mm	Tolerance +0,4 / -0,8 mm	Tolerance +0,8 / -0,4 mm	Size	Tolerance mm	mm	mm
1¼	32	42,4	0,50	0,60	15,9	7,1	39,0	+0/-0,4	1,6	43,3
1½	40	48,3	0,44	0,52	15,9	7,1	45,1	+0/-0,4	1,6	49,4
2	50	60,3	0,61	0,61	15,9	8,7	57,2	+0/-0,4	1,6	62,2
2½	65	76,1	0,76	0,76	15,9	8,7	72,3	+0/-0,4	2,0	77,7
3	80	88,9	0,89	0,79	15,9	8,7	84,9	+0/-0,4	2,0	90,6
4	100	114,3	1,14	0,79	15,9	8,7	110,1	+0/-0,5	2,2	116,2

For installations within Europe (EC) please note that the minimum pipe thickness in fire sprinkler piping should be according to standard EN 12845.

MINIMUM PIPE WALL THICKNESS

Allowable minimum pipe wall thickness combinations with PROFIT FITPRO® - coupling and rolled grooves.

1. Carbon steel pipes

Nominal pipe size		Minimum thickness T* MPW = 16 bar	Minimum thickness T** MWP = 20,7 bar	Minimum thickness T*** Only combined with FM-approved pipes	
NPS	DN	mm	mm	Thickness (mm)	MWP (bar)
1¼	32	2	2,77	1,6	12
1½	40	2	2,77	1,6	12
2	50	2	2,77	1,6	12
2½	65	2	3,05	2,11	12
3	80	2	3,05	2,34	12
4	100	2,3	3,05 (16 bar)	2,6	12

2. Stainless steel pipes [1]

NPS Inch	DN mm	Minimum pipe thickness for MWP 10 bar mm	Minimum pipe thickness for MWP 16 bar mm
2″	50	2	2
2.5″	65	2	2
3″	80	2	2
4″	100	2	2

T* According to Nordic Flow® grooved pipes (FM Approved).
T** For FM-application when couplings are combined with pipes with wall thickness bigger than the minimum thickness according to FM Property Loss Prevention datasheet 2-0.
T*** For FM-application only when combination of coupling and pipe are FM-listed.
MWP = maximum working pressure
[1] Test pressure = maximum 1,5 x MWP.

For installations within Europe (EC) please note that the minimum pipe thickness in fire sprinkler piping should be according to standard EN 12845.

GENERAL INFO

- Installers should be trained or experienced to install and understand the product.
- Read and understand all technical datasheets and installation instructions before attempting to install, remove or adjust any Profit piping products.
- Depressurise and drain the sprinkler installation system before attempting to install, remove or adjust any Profit piping products.
- Never work on piping-systems that are pressurised and / or filled with water.
- Use the necessary Personal Protection Equipment (PPE) to avoid personal injury (helmet, safety shoes and goggles, Profit gloves).

- Piping Logistics reserves the right to change specifications, designs and / or standard equipment without notice and without incurring in any obligations.
- Profit red and black coated products are intended for piping with indoor application (EN 12944-2 corrosivity category C1 & C2). For outdoor installations near the sea (corrosivity category C3) we advise the use of our hot dip galvanised couplings and fittings. For application in corrosivity category C4 (higher salinity climate) or higher, we advice Corrofit coating. ⚠C
- Pressure ratings listed for fire sprinkler applications are CWP (cold working pressure) or MWP (maximum working pressure) at a maximum service temperature of 66°C. This rating may occasionally differ from maximum working pressure listed and / or approved by UL and / or FM, as testing conditions and test pipes can differ. For more information, please contact info@pipinglogistics.eu.
- Maximum working pressure listed is the total of internal and external pressures based on standard weight (ANSI) steel pipe and standard roll or cut groove in accordance with Profit specifications. For more information, please contact info@pipinglogistics.eu.
- For one time field test only, the maximum joint working pressure may be increased by 150% the figure shown.
- Independent technical datasheet for bolts and nuts and rubber gaskets.

Failure to follow these instructions could result in death or serious injury and property damage.

We advise to always store our products in closed and dry environments, the products do not need any specific maintenance once installed on an above ground sprinkler installation.

REVISION TABLE

Date	△	Notes
26/06/2024		Page 4 - Addition of the CE certificate.
09/05/2025		New design.
09/05/2025		Page 1 - New notation of the working pressure.
09/05/2025		Page 2 - Addition of information about Corrofit and Geomet®.
09/05/2025		Page 6 - Addition of the minimum pipe wall thickness.
24/09/2025		Page 1, 2 & 3 - Addition of the black powdercoating.
02/10/2025		Page 1 - New product picture.
12/01/2026	C	Page 1, 2, 3 & 7 - Addition of information about Corrofit.
12/01/2026	D	Page 4 - New approval have been added.
21/10/2026	E	Page 4 - Addition of performance standards.